ACTUATECH
ACTUATOR TECHNOLOGY

Actuator datasheet

GS1440F16

Modification reserved. Rev.date 05.2021.
No guarantee for accuracy.
Older data sheets are invalid

COMPANY WITH MANAGEMENT SYSTEM CERTIFIED BY DNV GL
= ISO 9001 =
= ISO 14001 =

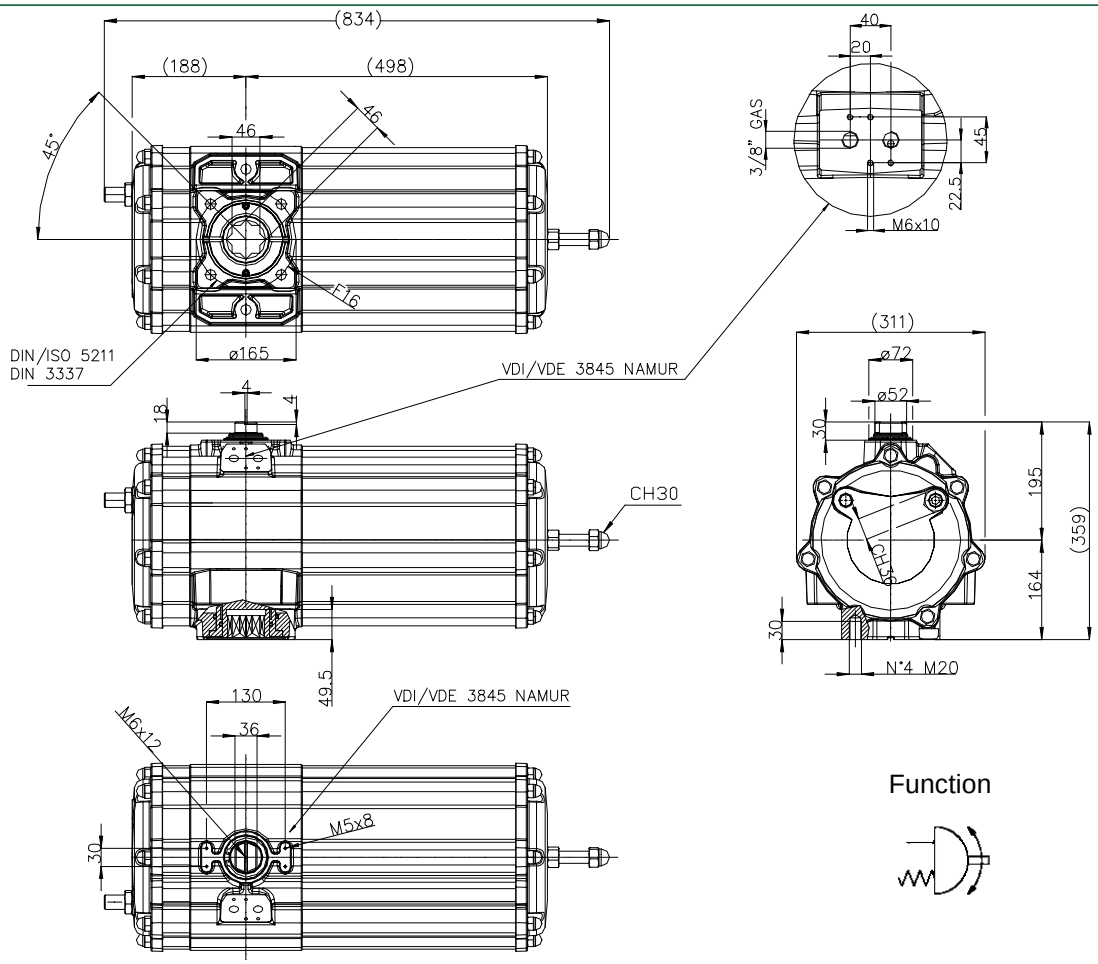

Function

Spring return Actuators Normally Closed (N.C.)- Output Torque related to rotation angle , in Nm
(0°valve closed 90° valve open)

Spring Torque				Air pressure supply in bar																													
SIZE	0°	50°	90°	2,4			2,8			3			3,5			4,2			5			5,6			6			7			8		
				0°	50°	90°	0°	50°	90°	0°	50°	90°	0°	50°	90°	0°	50°	90°	0°	50°	90°	0°	50°	90°	0°	50°	90°	0°	50°	90°	0°	50°	90°
2,4	411	308	617	617	308	411	788	411	582	874	462	668	1088	590	882	1388	770	1182															
3,5	600	450	900							686	321	386	900	450	600	1200	630	900	1543	836	1243	1800	990	1500									
5,6	960	720	1440																1183	566	703	1440	720	960	1611	823	1131	2040	1080	1560	2469	1337	1989

Technical Data

Max Pressure	** Min Pressure	Rotation	Stroke Adjustment	Screw Stroke Adjustment	*Moving time (sec.)		Operating temperature (°C)
					Opening	Closing	
8.4 bar	2.4 bar	100° -5° +95°	10 °	For 1° drive Need 9/8 turn screw	5	6	Standard –20°C +80°C High temperature –20°C +150°C Low temperature –50°C +60°C

Weight Kg	Chamber Ø (mm)	Air volume L/cycle	Maximum flange torque values
74	240	16.79	F16 = 4000 Nm

*The moving time could vary on different operating and installation factors.
****Attention: "Low Temperature" version is not available with 2.4 spring torque size and the Min Pressure is 3.5 bar.**

Operating Medium
The operating medium shall have a dew point equal to– 20 °C or, to be at least, 10 °C below the ambient temperature (ISO 85731, Class 3).The maximum particle size shall not exceed 40 µm (ISO 8573-1, Class 5).

ACTUATECH S.p.A.
Via San Lorenzo, 70 - 25069 Villa Carcina (BS) – ITALY Tel. (+39) 0308908142 Fax (+39) 0308908143
http://www.actuatech.com e-mail: actuatech@actuatech.com