ACTUATECH
ACTUATOR TECHNOLOGY

Actuator datasheet

GSV30XF05F07

Modification reserved. Rev.date 05.2021.
No guarantee for accuracy.
Older data sheets are invalid

COMPANY WITH MANAGEMENT SYSTEM CERTIFIED BY DNV GL
= ISO 9001 =
= ISO 14001 =

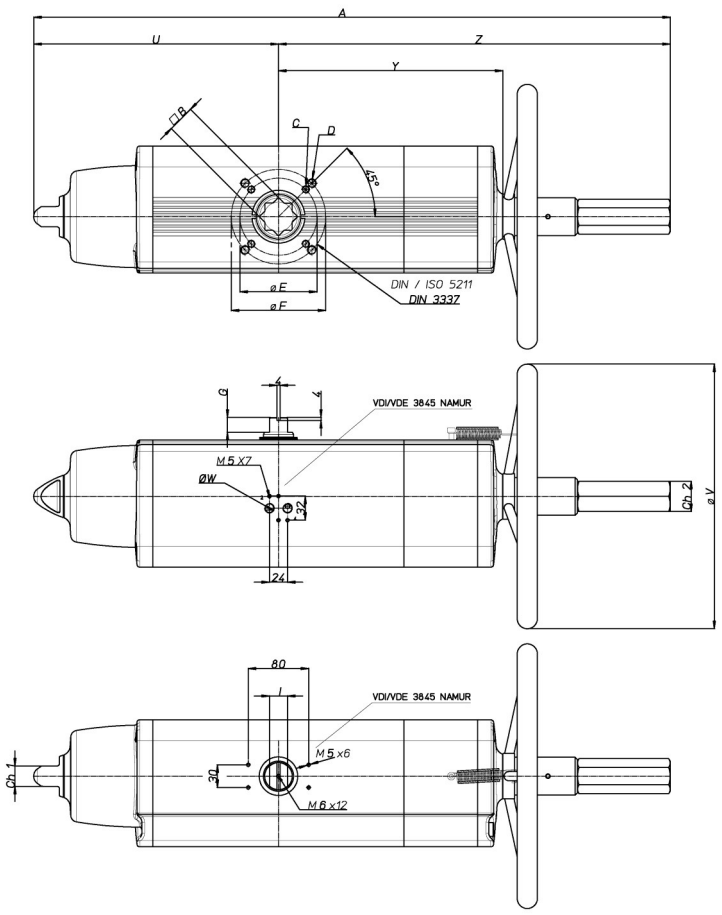

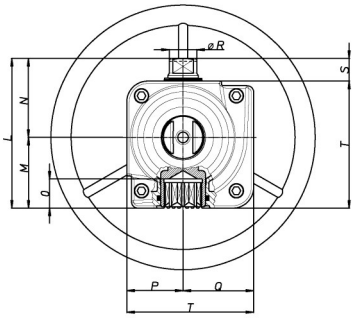

Function

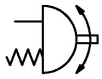

Ref.	Dimensions (mm)
Flange	F05 – F07
C x depth	M6x9
D x depth	M8x12
E	50
F	70
B	14
O	16.5
A	392.7
G	13
I	10
L	90.4
M	37.7
N	52.7
P	32.7
Q	37.7
R	14.5
S	20
T	70.4
U	129.4
V	180
Y	137.6
W	1/8" GAS
Z	263.3
Ch 1	13
Ch 2	28
Ancillaries Attachment	AA1

Spring return Actuators Normally Closed (N.C.) - Output Torque related to rotation angle , in Nm
(0°valve closed 90° valve open)

Spring Torque				Air pressure supply in bar																												
				2,4			2,8			3			3,5			4,2			5			5,6			6			7			8		
SIZE	0°	50°	90°	0°	50°	90°	0°	50°	90°	0°	50°	90°	0°	50°	90°	0°	50°	90°	0°	50°	90°	0°	50°	90°	0°	50°	90°	0°	50°	90°	0°	50°	90°
2,8	17,5	13,0	26,5	11,4	5,4	6,4	15,0	7,5	10,0	16,8	8,6	11,8	21,3	11,3	16,3	27,5	15,0	22,5															
3,5	22,0	16,5	33,0							14,3	6,7	8,0	18,8	9,4	12,5	25,1	13,2	18,8	32,2	17,5	25,9	37,6	20,7	31,3									
4,2	26,0	19,5	40,0										16,3	7,5	8,8	22,5	11,3	15,0	29,6	15,6	22,1	35,0	18,8	27,5	38,6	21,0	31,1	47,5	26,4	40,0	56,4	31,7	48,9
5,6	35,0	26,0	53,0																24,6	11,8	14,6	30,0	15,0	20,0	33,6	17,1	23,6	42,5	22,5	32,5	51,4	27,9	41,4

Technical Data

Max Pressure	** Min Pressure	Rotation	Stroke Adjustment	Screw Stroke Adjustment	*Moving time (sec.)		Operating temperature (°C)
					Opening	Closing	
8.4 bar	1 bar	92° -1° +91°	Not available	-	0.23	0.27	Standard –20°C +80°C High temperature –20°C +150°C Low temperature –50°C +60°C

Weight Kg	Chamber Ø (mm)	Air volume L/cycle	Theoretical n° of turns to close/open starting from neutral position	Rim pull force (N) to obtain the nominal torque	Maximum flange torque values
3.15	50	0.17	11	19.3	F05 = 125 Nm F07 = 250 Nm

****Attention:**
for "High Temperature"
and "Low Temperature" version,
the Min Pressure is 3 bar.

*The moving time could vary on different operating and installation factors .

Operating Medium
The operating medium shall have a dew point equal to – 20 °C or, to be at least, 10 °C below the ambient temperature (ISO 8573-1, Class 3).
The maximum particle size shall not exceed 40 µm (ISO 8573-1, Class 5).

ACTUATECH S.p.A.
Via S. Lorenzo, 70, 25069 Villa Carcina BS – ITALY Tel. (+39) 0308908142 Fax (+39) 0308908143
http://www.actuatech.com e-mail: actuatech@actuatech.com