ACTUATECH
ACTUATOR TECHNOLOGY

Actuator datasheet

GS120F07F10

Modification reserved. Rev.date 01.2015.
No guarantee for accuracy.
Older data sheets are invalid

COMPANY WITH MANAGEMENT SYSTEM CERTIFIED BY DNV GL
= ISO 9001 =
= ISO 14001 =

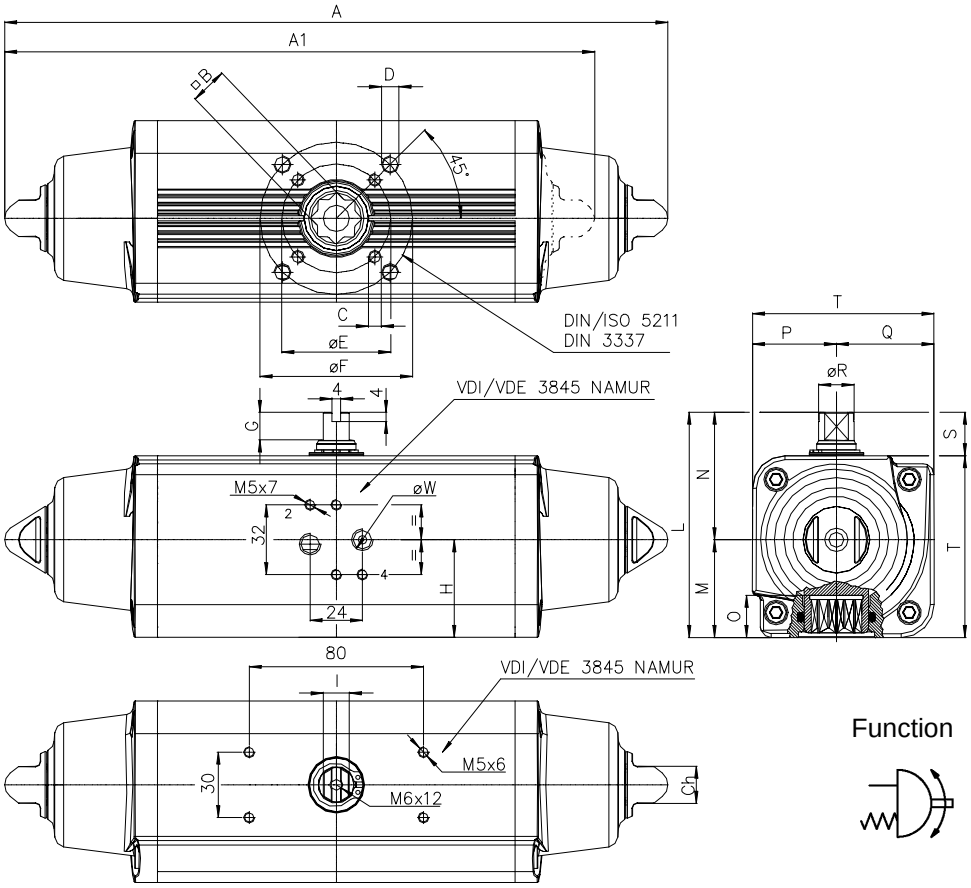

Function

Ref.	Dimensions (mm)
Flange	F07 - F10
C x depth	M8x12
D x depth	M10x15
E	70
F	102
B	22
O	24.8
A	409.6
G	17
H (bore)	60.1
I	15
L	141.1
M	60.1
N	81
P	51
Q	60.1
R	22.5
S	30
T	111.1
W	1/8" GAS
Ch	22
Ancillaries Attachment	AA2

Spring return Actuators Normally Closed (N.C.) - Output Torque related to rotation angle , in Nm
(0°valve closed 90° valve open)

Spring Torque				Air pressure supply in bar																																
				2,4			2,8			3			3,5			4,2			5			5,6			6			7			8		
SIZE	0°	50°	90°	0°	50°	90°	0°	50°	90°	0°	50°	90°	0°	50°	90°	0°	50°	90°	0°	50°	90°	0°	50°	90°	0°	50°	90°	0°	50°	90°	0°	50°	90°
2,8	40,0	30,0	60,0	45,7	21,4	25,7	60,0	30,0	40,0	67,1	34,3	47,1	85,0	45,0	65,0	110,0	60,0	90,0															
3,5	50,0	37,5	75,0							57,1	26,8	32,1	75,0	37,5	50,0	100,0	52,5	75,0	128,6	69,6	103,6	150,0	82,5	125,0									
4,2	60,0	45,0	90,0										65,0	30,0	35,0	90,0	45,0	60,0	118,6	62,1	88,6	140,0	75,0	110,0	154,3	83,6	124,3	190,0	105,0	160,0	225,7	126,4	195,7
5,6	80,0	60,0	120,0																98,6	47,1	58,6	120,0	60,0	80,0	134,3	68,6	94,3	170,0	90,0	130,0	205,7	111,4	165,7

Technical Data

Max Pressure	** Min Pressure	Rotation	Stroke Adjustment	Screw Stroke Adjustment	*Moving time (sec.)		Operating temperature (°C)
					Opening	Closing	
8.4 bar	2.4 bar	92° -1° +91°	10 °	For 1° drive Need 1/2 turn screw	0.72	0.92	Standard –20°C +80°C High temperature –20°C +150°C Low temperature –50°C +60°C

Weight Kg	Chamber Ø (mm)	Air volume L/cycle	Maximum flange torque values
6.8	80	0.8	F07 = 250 Nm F10 = 500 Nm

	A1	Weight Kg
Spring return Actuator with spring force 2.8 , is manufactured with only one spring cap and normal end cap (available only in standard version).	361.6	5.8

*The moving time could vary on different operating and installation factors.
**Attention: for “High Temperature” and “Low Temperature” version, the Min Pressure is 3.5 bar.

Operating Medium
The operating medium shall have a dew point equal to – 20 °C or, to be at least, 10 °C below the ambient temperature (ISO 8573-1, Class 3).
The maximum particle size shall not exceed 40 µm (ISO 8573-1, Class 5).

ACTUATECH S.p.A.
F.lli Capponi, 126/128 25068 Sarezzo (BS) – ITALY Tel. (+39) 0308908142 Fax (+39) 0308908143
http://www.actuatech.com e-mail: actuatech@actuatech.com