ACTUATECH
ACTUATOR TECHNOLOGY

Actuator datasheet

GS2880F16

Modification reserved. Rev.date 01.2015.
No guarantee for accuracy.
Older data sheets are invalid

COMPANY WITH MANAGEMENT SYSTEM CERTIFIED BY DNV GL
= ISO 9001 =
= ISO 14001 =

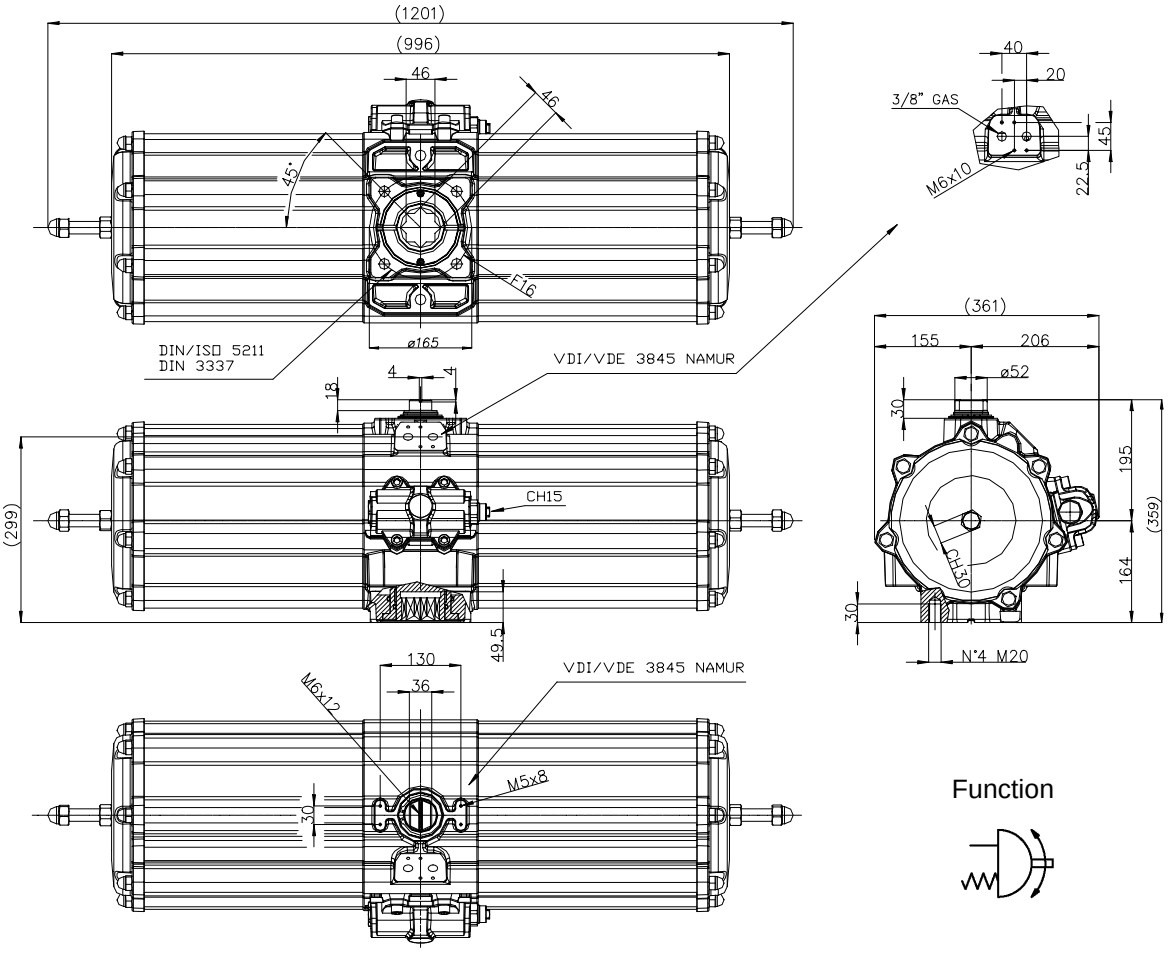

Function

Spring return Actuators Normally Closed (N.C.) - Output Torque related to rotation angle , in Nm
(0°valve closed 90° valve open)

Spring Torque				Air pressure supply in bar																																
SIZE	0°	50°	90°	2,4			2,8			3			3,5			4,2			5			5,6			6			7			8		
				0°	50°	90°	0°	50°	90°	0°	50°	90°	0°	50°	90°	0°	50°	90°	0°	50°	90°	0°	50°	90°	0°	50°	90°	0°	50°	90°	0°	50°	90°
2,8	960	720	1440	1097	514	617	1440	720	960	1611	823	1131	2040	1080	1560	2640	1440	2160															
3,5	1200	900	1800							1371	643	771	1800	900	1200	2400	1260	1800	3086	1671	2486	3600	1980	3000									
4,2	1440	1080	2160										1560	720	840	2160	1080	1440	2846	1491	2126	3360	1800	2640	3703	2006	2983	4560	2520	3840	5417	3034	4697
5,6	1920	1440	2880																2366	1131	1406	2880	1440	1920	3223	1646	2263	4080	2160	3120	4937	2674	3977

Technical Data

Max Pressure	** Min Pressure	Rotation	Stroke Adjustment	Screw Stroke Adjustment	*Moving time (sec.)		Operating temperature (°C)
					Opening	Closing	
8.4 bar	2.4 bar	100° -5° +95°	10 °	For 1° drive Need 9/8 turn screw	9	11	Standard –20°C +80°C High temperature –20°C +150°C Low temperature –50°C +60°C

Weight Kg	Chamber Ø (mm)	Air volume L/cycle	Maximum flange torque values
117	240	21	F16 = 4000 Nm

*The moving time could vary on different operating and installation factors.
****Attention: "Low Temperature" version is not available with 2.8 spring torque size and the Min Pressure is 3.5 bar.**

Operating Medium
The operating medium shall have a dew point equal to – 20 °C or, to be at least, 10 °C below the ambient temperature (ISO 8573-1, Class 3).The maximum particle size shall not exceed 40 µm (ISO 8573-1, Class 5).

ACTUATECH S.p.A.
F.lli Capponi, 126/128 25068 Sarezzo (BS) – ITALY Tel. (+39) 0308908142 Fax (+39) 0308908143
http://www.actuatech.com e-mail: actuatech@actuatech.com